ROHS Compliant

THIS INFORMATION IS CONFIDENTIAL AND IS DISCLOSED TO YOU ON CONDITION THAT NO FURTHER DISCLOSURE IS MADE BY YOU TO OTHER THAN TETULL PERSONNEL WITHOUT WRITTEN AUTHORIZATION FROM TETULL LTD.

REV.	ECN NO OR DESCRIPTION	REVISED	DATE
A	PRODUCT RELEASE	ARES	2017.09.25
B	MODIFY	BROKEN	2020.06.08

NOTE:

1. ELECTRICAL CHARACTERISTICS
1-1. VOLTAGE RATING:30V AC
1-2. CURRENT RATING:1.0A
1-3. CONTACT RESISTANCE: 50 milliohms MAX.
1-4. INSULATION RESISTANCE: 100 Megohms MIN.
1-5. DIELECTRIC WITHSTANDING VOLTAGE: 250V AC FOR 1 MINUTE.
2. MECHANICAL CHARACTERISTICS
2-1. MATING&UNMATING FORCE: 0.5kgf~3.5kgf
2-2. DURIBILITY: 5000 CYCLES
3. SALT SPRAY: 24H
4. OPERATING TEMPERATURE:-40°C~85°C
5. RoHS 2002/95/EC COMPLIANT.
6. MPQ : 1000PCS/REEL

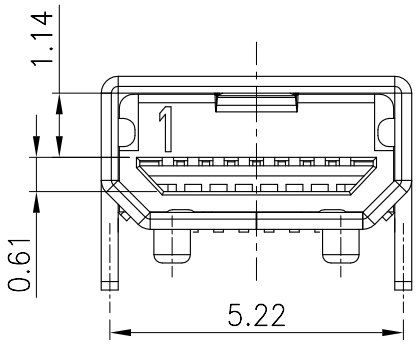

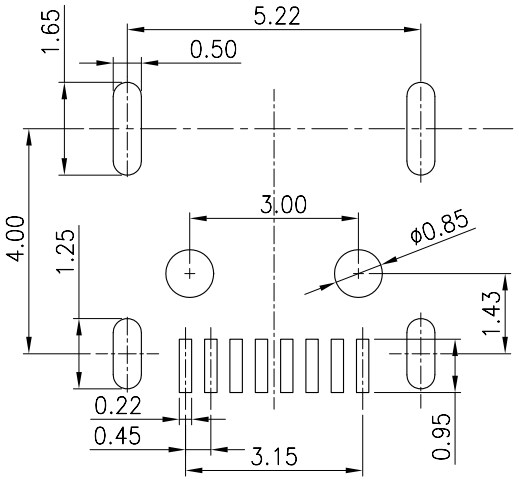

RECOMMENDED P.C.B. LAYOUT
TOLERANCE UNSPECIFIED ±0.05mm

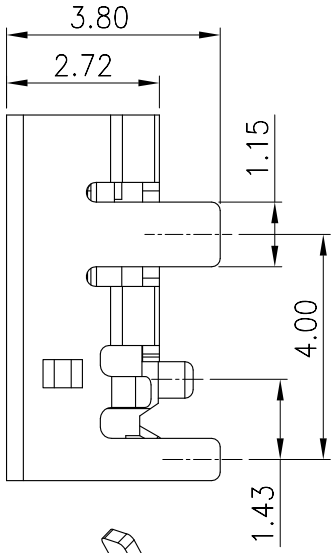

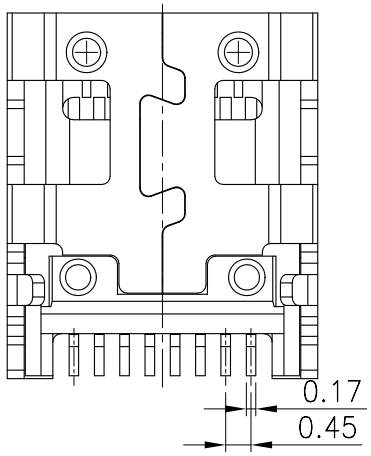

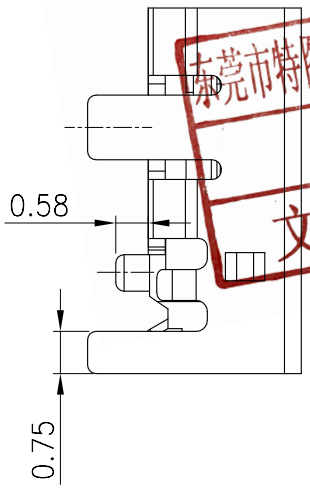

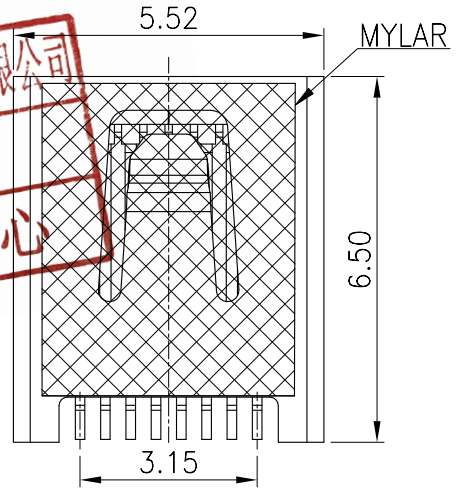

东莞市特图精密电子有限公司
2022 4 21
文控中心

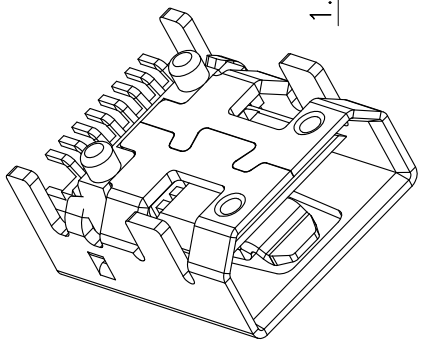

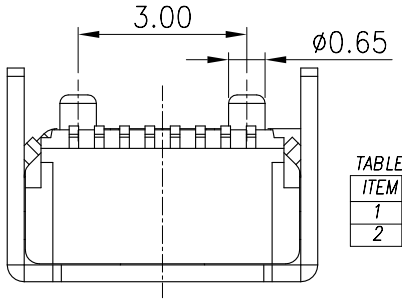

TABLE:

ITEM	P/N	SHIELD PLATING
1	1030802AR004	Au
2	1030802AR007	NI

NO	DESCRIPTION	QTY	MATERIAL	PLATING & COLOR
C	SHIELD	1	COPPER ALLOY 0.30T	SEE TABLE
B	TERMINAL	8	COPPER ALLOY 0.15T	Gold Flash On Contact Area and Solder tail All over Nickel Plated .
A	HOUSING	1	THERMOPLASTIC UL94-V0	BLACK

UNLESS OTHERWISE SPECIFED TOLERANCES

DECIMALS:
X :±0.5
X.X :±0.3
X.XX :±0.2

ANGLES:
X :±2°
X.X :±1°

TETULL

TITLE: Mini usb FM 8P SMT TYPE

PART NO.	1030802AR004/007	
DWN	BROKEN	2020.06.08
CHKD		
APVD		
SCALE 1:1	UNIT: mm	
CUSTOMER COPY	SIZE: A4	SHEET: 1OF1	REV: B

TETULL

TETULL CORPORATION