ROHS Compliant

THIS INFORMATION IS CONFIDENTIAL AND IS DISCLOSED TO YOU ON CONDITION THAT NO FURTHER DISCLOSURE IS MADE BY YOU TO OTHER THAN TETULL PERSONNEL WITHOUT WRITTEN AUTHORIZATION FROM TETULL LTD.

REV.	ECN NO OR DESCRIPTION	REVISED	DATE
B	MODIFY	ARES	2020.05.27

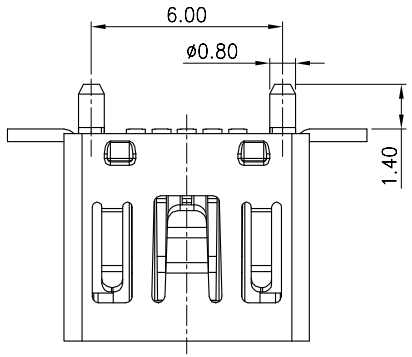

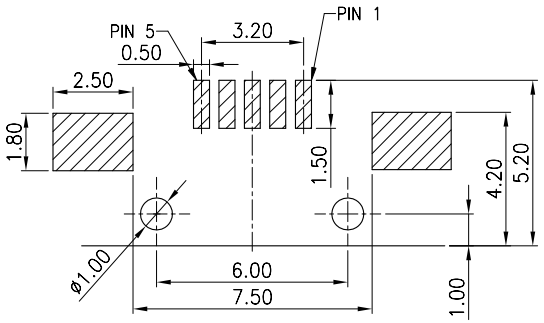

RECOMMENDED P.C.B. LAYOUT
TOLERANCE UNSPECIFIED ±0.05mm

NOTE:

1. ELECTRICAL CHARACTERISTICS
   1-1. VOLTAGE RATING:30V AC
   1-2. CURRENT RATING:1.0A
   1-3. CONTACT RESISTANCE: 50 milliohms MAX.
   1-4. INSULATION RESISTANCE: 100 Megohms MIN.
   1-5. DIELECTRIC WITHSTANDING VOLTAGE: 500V AC FOR 1 MINUTE.
2. MECHANICAL CHARACTERISTICS
   2-1. MATING FORCE: 3.5kgf MAX
   UNMATING FORCE: 0.7kgf MIN
   2-2. DURIBILITY: 5000 CYCLES
3. SALT SPRAY: 24H
4. OPERATING TEMPERATURE:-40°C~85°C
5. RoHS 2002/95/EC COMPLIANT.
6. MPQ : SEE TABLE.

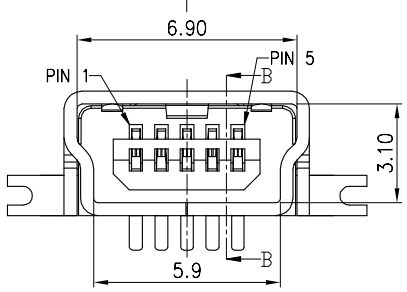

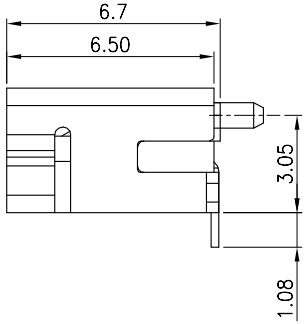

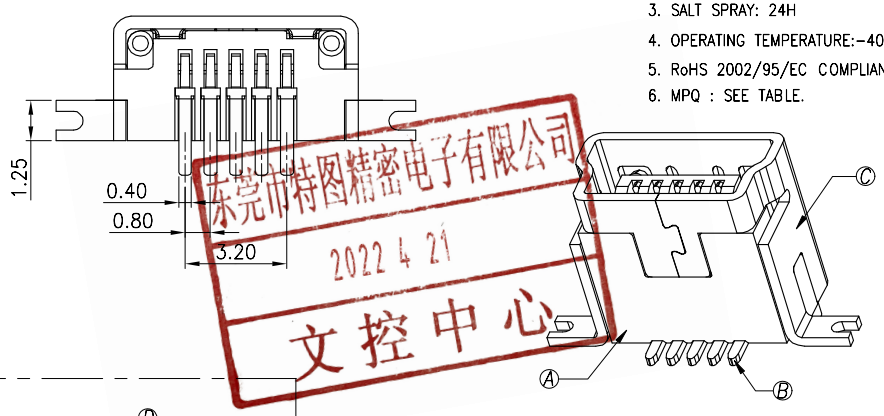

东莞市特图精密电子有限公司
2022 4 21
文控中心

SHELL	SHIELD
5	GND
4	ID
3	D+
2	D-
1	VBUS
PIN	NAME
PIN ASSIGNMENT	

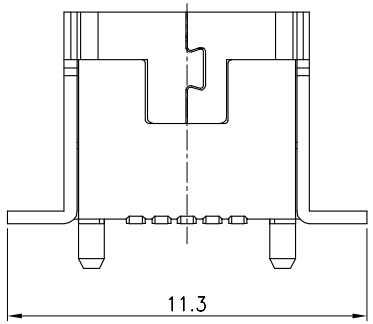

TABLE:

PACKING	P/N.
600PCS/REEL	1030512AR001
100PCS/TRAY	1030512AP001

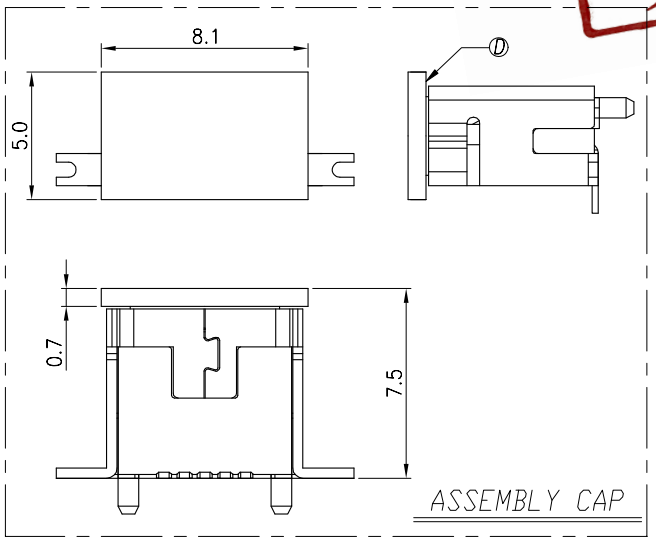

ASSEMBLY CAP

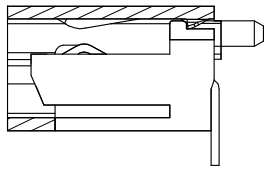

SECTION B-B

NO	DESCRIPTION	QTY	MATERIAL	PLATING & COLOR
D	CAP	1	LCP	BLACK
C	SHIELD	1	C2680	Ni&Tin PLATED
B	TERMINAL	5	C5191	Gold Flash On Contact Area Tin plated on Solder tail All over Nickel Plated .
A	HOUSING	1	LCP	BLACK

UNLESS OTHERWISE SPECIFED TOLERANCES

DECIMALS:
X :±0.5
X.X :±0.3
X.XX :±0.2

ANGLES:
X :±2°
X.X :±1°

TETULL

TITLE: Mini usb FM 5P SMT (ST) TYPE

PART NO.	1030512AX001	
DWN	ARES	2020.05.27
CHKD		
APVD		
SCALE 1:1	UNIT: mm	
CUSTOMER COPY	SIZE: A4	SHEET: 1OF1	REV: B

TETULL

TETULL CORPORATION