ROHS Compliant

THIS INFORMATION IS CONFIDENTIAL AND IS DISCLOSED TO YOU ON CONDITION THAT NO FURTHER DISCLOSURE IS MADE BY YOU TO OTHER THAN TETULL PERSONNEL WITHOUT WRITTEN AUTHORIZATION FROM TETULL LTD.

REV.	ECN NO OR DESCRIPTION	REVISED	DATE
A	PRODUCT RELEASE	ARES	2016.04.13

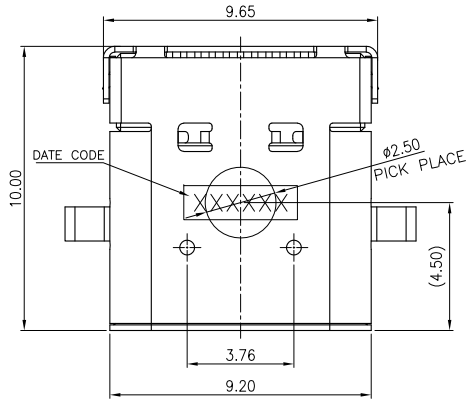

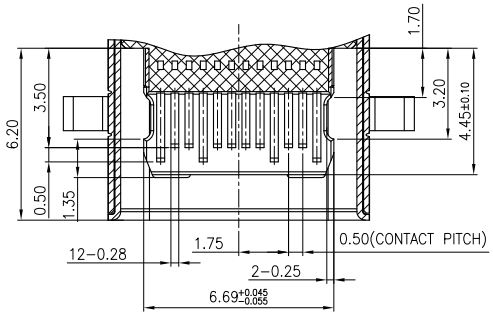

SECTION B−B

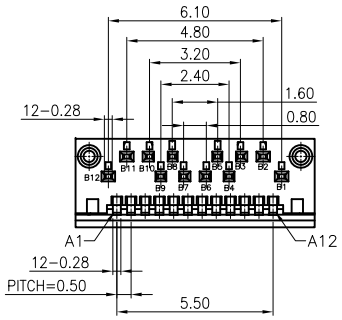

NOTE:

1. ELECTRICAL CHARACTERISTICS
   - 1−1. VOLTAGE RATING: 20V MAX
   - 1−2. CURRENT RATING: 3.0A MAX
   - 1−3. CONTACT RESISTANCE: 40 milliohms MAX.
   - 1−4. INSULATION RESISTANCE: 100 Megohms MIN.
   - 1−5. DIELECTRIC WITHSTANDING VOLTAGE: 100V AC FOR 1 MINUTE.
2. MECHANICAL CHARACTERISTICS
   - 2−1. MATING FORCE: 5~20N
   - 2−2. UNMATING FORCE: 8~20N
   - 2−3. DURIBILITY:10000 CYCLES
3. SALT SPRAY: 24H
4. OPERATING TEMPERATURE:−40°C~85°C
5. RoHS 2002/95/EC COMPLIANT.
6. MPQ : 1000PCS/REEL.

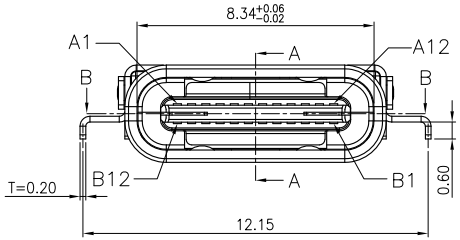

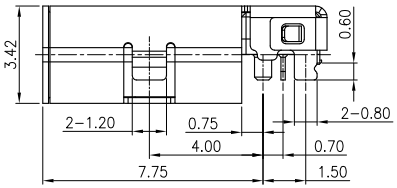

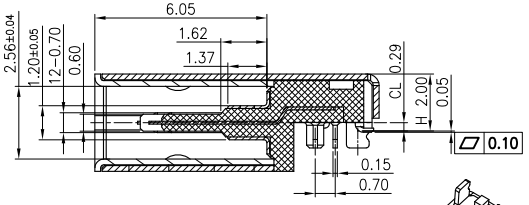

SECTION A−A

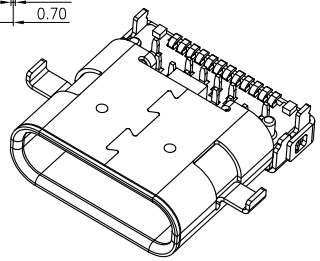

PIN	SIGNAL NAME	PIN	SIGNAL NAME
A1	GND	B12	GND
A2	SSTXP1	B11	SSRXP1
A3	SSTXN1	B10	SSRXN1
A4	VBUS	B9	VBUS
A5	CC1	B8	SBU2
A6	DP1	B7	DN2
A7	DN1	B6	DP2
A8	SBU1	B5	CC2
A9	VBUS	B4	VBUS
A10	SSRXN2	B3	SSTXN2
A11	SSRXP2	B2	SSTXP2
A12	GND	B1	GND

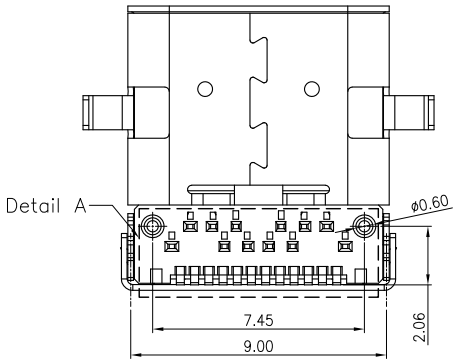

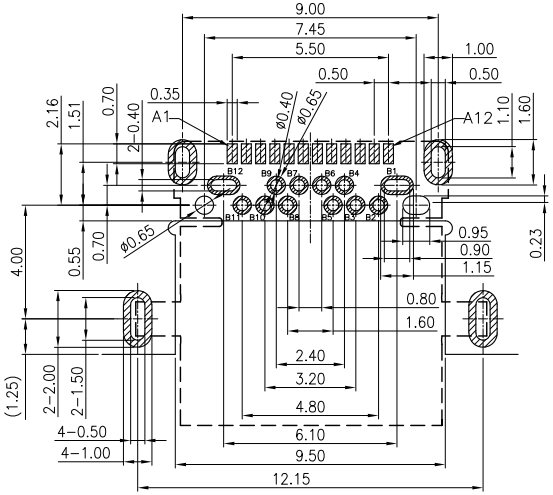

RECOMMENDED P.C.B. LAYOUT
TOLERANCE UNSPECIFIED ±0.05mm

NO	DESCRIPTION	QTY	MATERIAL	PLATING & COLOR
E	SHELL	1	STAINLESS STEEL 0.20t	Ni PLATING
D	SHIELD	1	STAINLESS STEEL 0.20t	Ni PLATING
C	GUARD PLATE	1	STAINLESS STEEL 0.10t	Ni PLATING
B	CONTACT	24	COPPER ALLOY 0.15t	Gold Flash On Contact Area Tin plated on Solder tail All over Nickel Plated .
A	HOUSING	1	THERMOPLASTIC UL94-V0	BLACK

UNLESS OTHERWISE SPECIFED TOLERANCES

DECIMALS:
X :±0.5
X.X :±0.3
X.XX :±0.2

ANGLES:
X :±2°
X.X :±1°

TETULL

TITLE: USB TYPE C 24P SMT TYPE(MID)

PART NO.	1022405GR004	
DWN	ARES	2016.04.13
CHKD		
APVD		
SCALE 1:1	UNIT: mm	
CUSTOMER COPY	SIZE: A4	SHEET: 10F1	REV: A

TETULL

TETULL CORPORATION